RADIO TEST REPORT

REPORT NO.: RE950331L08A
MODEL NO.: SDC-MCF10G
RECEIVED: Mar. 18, 2008
TESTED: Mar. 27 ~ Apr. 10, 2008
ISSUED: Apr. 14, 2008

APPLICANT: Summit Data Communications, Inc.

ADDRESS: 526 South Main Street Suite 805 Akron, OH 44311 United States

ISSUED BY: Advance Data Technology Corporation

LAB ADDRESS: No. 47, 14th Ling, Chia Pau Tsuen, Lin Kou Hsiang, Taipei Hsien, Taiwan, R.O.C.

TEST LOCATION: No. 19, Hwa Ya 2nd Rd., Wen Hwa Tsuen, Kwei Shan Hsiang, Taoyuan Hsien, Taiwan, R.O.C.

This test report consists of 33 pages in total. It may be duplicated completely for legal use with the approval of the applicant. It should not be reproduced, except in full, without the written approval of our laboratory. The client should not use it to claim product endorsement by TAF, A2LA or any government agency. The test results in the report only apply to the tested sample.

Testing Laboratory 0528

TESTING CERT # 2177-01

Table of Contents

1 CERTIFICATION 4
2 SUMMARY OF TEST RESULTS 5
2.1 TEST INSTRUMENTS 6
2.2 MEASUREMENT UNCERTAINTY 7
2.3 MAXIMUM MEASUREMENT UNCERTAINTY 7
3 GENERAL INFORMATION 8
3.1 GENERAL DESCRIPTION OF EUT 8
3.2 DESCRIPTION OF TEST MODES 9
3.2.1 CONFIGURATION OF SYSTEM UNDER TEST 9
3.2.2 TEST MODE APPLICABILITY AND TESTED CHANNEL DETAIL 10
3.3 GENERAL DESCRIPTION OF APPLIED STANDARDS 12
3.4 DESCRIPTION OF SUPPORT UNITS 12
4 TEST PROCEDURES AND RESULTS 13
TRANSMITTER PARAMETERS 13
4.1 EQUIVALENT ISOTROPIC RADIATED POWER 13
4.1.1 LIMITS OF EQUIVALENT ISOTROPIC RADIATED POWER 13
4.1.2 TEST PROCEDURE 13
4.1.3 DEVIATION FROM TEST STANDARD 13
4.1.4 TEST SETUP 13
4.1.5 TEST RESULTS 14
4.2 PEAK POWER DENSITY 16
4.2.1 LIMIT OF PEAK POWER DENSITY 16
4.2.2 TEST PROCEDURE 16
4.2.3 DEVIATION FROM TEST STANDARD 16
4.2.4 TEST SETUP 16
4.2.5 TEST RESULTS 17
4.3 FREQUENCY RANGE 18
4.3.1 LIMITS OF FREQUENCY RANGE 18
4.3.2 TEST PROCEDURE 18
4.3.3 DEVIATION FROM TEST STANDARD 18
4.3.4 TEST SETUP 18
4.3.5 TEST RESULTS 19
4.4 TRANSMITTER SPURIOUS EMISSIONS 23
4.4.1 LIMITS OF TRANSMITTER SPURIOUS EMISSIONS 23
4.4.2 TEST PROCEDURE 23
4.4.3 DEVIATION FROM TEST STANDARD 23
4.4.4 TEST SETUP 23
4.4.5 TEST RESULTS 24
RECEIVER PARAMETERS 28
4.5 RECEIVER SPURIOUS EMISSIONS 28
4.5.1 LIMITS OF RECEIVER SPURIOUS EMISSIONS 28

4.5.2 TEST PROCEDURE 28
4.5.3 DEVIATION FROM TEST STANDARD 28
4.5.4 TEST SETUP 28
4.5.5 TEST RESULTS 29
5 PHOTOGRAPHS OF THE TEST CONFIGURATION 32
6 INFORMATION ON THE TESTING LABORATORIES 33

1 CERTIFICATION

PRODUCT: 802.11g Mini-Compact Flash Module with Dual U.FL Connectors

MODEL: SDC-MCF10G

BRAND: Summit

APPLICANT: Summit Data Communications, Inc.

TESTED: Mar. 27 ~ Apr. 10, 2008

TEST SAMPLE: ENGINEERING SAMPLE

STANDARD: **EN 300 328 V1.7.1 (2006-10)**

The above equipment (model: SDC-MCF10G) has been tested by **Advance Data Technology Corporation**, and found compliance with the requirement of the above standards. The test record, data evaluation & Equipment Under Test (EUT) configurations represented herein are true and accurate accounts of the measurements of the sample's EMC characteristics under the conditions specified in this report.

PREPARED BY : Wendy Liao , **DATE:** Apr. 14, 2008
Wendy Liao / Senior Specialist

TECHNICAL ACCEPTANCE Responsible for RF : James Fan , **DATE:** Apr. 14, 2008
James Fan / Engineer

APPROVED BY : Gary Chang , **DATE:** Apr. 14, 2008
Gary Chang / Assistant Manager

2 SUMMARY OF TEST RESULTS

The EUT has been tested according to the following specifications:

EN 300 328 V1.7.1			
Clause	**Test Parameter**	**Remarks**	**Pass/Fail**
	TRANSMITTER PARAMETERS		
4.3.1	Equivalent Isotropic Radiated Power	Applicable	Pass
4.3.2	Peak Power Density	Applicable	Pass
4.3.3	Frequency Range	Applicable	Pass
4.3.6	Spurious Emissions (Operating)	Applicable	Pass
4.3.6	Spurious Emissions (Standby)	See Note 1	Pass
	RECEIVER PARAMETERS		
4.3.7	Spurious Emissions	Applicable	Pass

NOTE: 1. The emission of the transmitter on standby mode is equal to that of receiving mode.
2. Additional Ch.1 (2412MHz) ~ Ch.7 (2442MHz) for 802.11b/g was recorded, for showing effective use frequency spectrum on France.

2.1 TEST INSTRUMENTS

DESCRIPTION & MANUFACTURER	MODEL NO.	SERIAL NO.	CALIBRATED UNTIL
Spectrum Analyzer Agilent	E4446A	MY44360124	Dec. 12, 2008
BILOG Antenna SCHWARZBECK	VULB 9168	9168-161	Sep. 13, 2008
HORN Antenna ETS	3117	00034127	Jan. 21, 2009
Signal Generator Agilent	E8257C	MY43320668	Dec. 25, 2008
Preamplifier Agilent	8449B	3008A01910	Sep. 19, 2008
Preamplifier Agilent	8447D	2944A10639	Dec. 19, 2008
RF signal cable HUBER+SUHNER	SUCOFLEX 104	231237/4	Dec. 06, 2008
RF signal cable HUBER+SUHNER	SUCOFLEX 104	251640/4	Dec. 06, 2008
Software ADT.	ADT_Radiated_V7.6	NA	NA
Antenna Tower Inn-co GmbH	MA 4000	MA 4000/013/6150303/L	NA
Turn Table ADT	NA	SN30303	NA
Controller TDK RF	SI-300	1200015	NA
Temperature & Humidity chamber TERCHY	MHU-225AU	920842	Jun. 28, 2008

NOTE: 1. The calibration interval of the above test instruments is 12 months and the calibrations are traceable to NML/ROC and NIST/USA.
2. The test was performed in HwaYa RF Chamber 2.
3. The horn antenna and HP preamplifier (model: 8449B) are used only for the measurement of emission frequency above 1GHz if tested.

2.2 MEASUREMENT UNCERTAINTY

Where relevant, the following measurement uncertainty levels have been estimated for tests performed on the EUT:

PARAMETER	UNCERTAINTY
Radio frequency	$\pm 1.06 \times 10^{-8}$
total RF power, conducted	1.371 dB
RF power density , conducted	2.889 dB
All emissions, radiated	±3.294 dB
Temperature	±0.23 °C
Humidity	±0.3 %
DC and low frequency voltages	±0.3 %

This uncertainty represents an expanded uncertainty expressed at approximately the 95% confidence level using a coverage factor of k=2.

2.3 MAXIMUM MEASUREMENT UNCERTAINTY

For the test methods, according to ETSI EN 300 328 standard, the measurement uncertainty figures shall be calculated in accordance with TR 100 028-1 [4] and shall correspond to an expansion factor (coverage factor) k = 1.96 or k = 2 (which provide confidence levels of respectively 95 % and 95.45 % in the case where the distributions characterizing the actual measurement uncertainties are normal (Gaussian)).

Maximum measurement uncertainty

PARAMETER	UNCERTAINTY
Radio frequency	$\pm 1 \times 10^{-5}$
Total RF power, conducted	±1.5 dB
RF power density , conducted	±3 dB
All emissions, radiated	± 6.0 dB
Temperature	± 1 °C
Humidity	± 5.0 %
DC and low frequency voltages	± 3.0 %

3 GENERAL INFORMATION

3.1 GENERAL DESCRIPTION OF EUT

PRODUCT	802.11g Mini-Compact Flash Module with Dual U.FL Connectors
MODEL NO.	SDC-MCF10G
SOURCE VOLTAGE	V_{nom}= 230 V_{min}= 207 V_{max}= 253
POWER SUPPLY	3.3Vdc from host equipment
MODULATION TYPE	CCK, DQPSK, DBPSK for DSSS 64QAM, 16QAM, QPSK, BPSK for OFDM
MODULATION TECHNOLOGY	DSSS, OFDM
TRANSFER RATE	802.11b: 11/5.5/2/1Mbps 802.11g: 54/48/36/24/18/12/9/6Mbps
OPERATING FREQUENCY	2400 ~ 2454.0 MHz for outdoor usage in France 2400 ~ 2483.5 MHz for EU countries (include indoor usage in France)
NUMBER OF CHANNEL	7 for outdoor usage in France, 13 for EU countries (include indoor usage in France)
EIRP POWER (FOR 802.11b)	19.35 dBm (Measured Max. Average)
EIRP POWER (FOR 802.11g)	16.34 dBm (Measured Max. Average)
ANTENNA TYPE	PCB antenna with 0 dBi gain
I/O PORTS	NA
DATA CABLE	NA
ACCESSORY DEVICES	NA

NOTE:

1. The EUT operates in the 2.4GHz frequency range, lets you connect IEEE 802.11g or IEEE 802.11b devices to the network. With its high-speed data transmissions of up to 54Mbps.
2. The EUT with two platforms as below:

Mobile Data Terminals (MDTs)
Vehicle Mounted Devices (VMDs)

3. The above EUT information was declared by manufacturer and for more detailed features description, please refer to the manufacturer's specifications or User's Manual.

3.2 DESCRIPTION OF TEST MODES

Thirteen channels are provided to the EUT for normal mode.

CHANNEL	FREQUENCY	CHANNEL	FREQUENCY
1	2412 MHz	8	2447 MHz
2	2417 MHz	9	2452 MHz
3	2422 MHz	10	2457 MHz
4	2427 MHz	11	2462 MHz
5	2432 MHz	12	2467 MHz
6	2437 MHz	13	2472 MHz
7	2442 MHz		

3.2.1 CONFIGURATION OF SYSTEM UNDER TEST

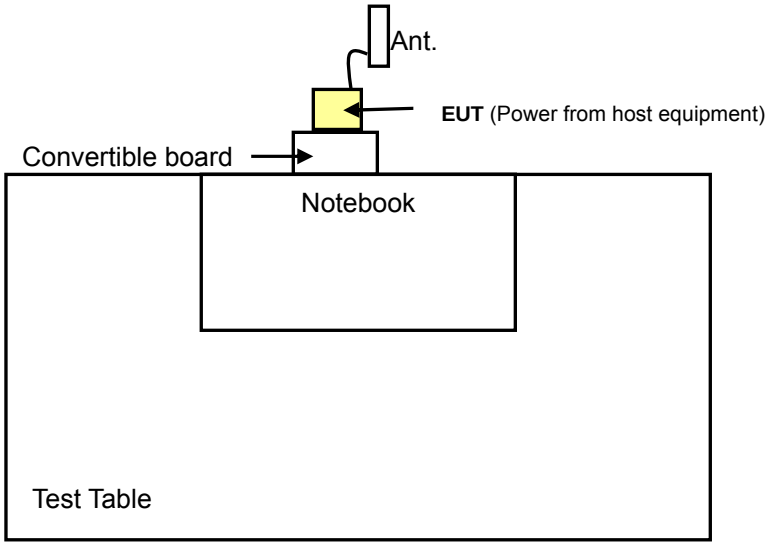

3.2.2 TEST MODE APPLICABILITY AND TESTED CHANNEL DETAIL

EUT CONFIGURE MODE	APPLICABLE TO					DESCRIPTION
	EIRP	PPD	FR	SE<1G	SE≥1G	
-	√	√	√	√	√	-

Where **EIRP:** Equivalent Isotropic Radiated Power **PPD:** Peak Power Density

FR: Frequency Range **SE<1G:** Spurious Emissions below 1GHz

SE≥1G: Spurious Emissions above 1GHz

EQUIVALENT ISOTROPIC RADIATED POWER:

☒ Pre-Scan has been conducted to determine the worst-case mode from all possible combinations between available modulations, xyz axis, data rates and antenna ports (if EUT with antenna diversity architecture).

☒ Following channel(s) was (were) selected for the final test as listed below.

MODE	AVAILABLE CHANNEL	TESTED CHANNEL	MODULATION TECHNOLOGY	MODULATION TYPE	DATA RATE (Mbps)	AXIS
802.11b	1 to 13	1, 4, 7, 13	DSSS	DBPSK	1	z
802.11g	1 to 13	1, 4, 7, 13	OFDM	BPSK	6	z

PEAK POWER DENSITY TEST:

☒ Pre-Scan has been conducted to determine the worst-case mode from all possible combinations between available modulations, data rates and antenna ports (if EUT with antenna diversity architecture).

☒ Following channel(s) was (were) selected for the final test as listed below.

MODE	AVAILABLE CHANNEL	TESTED CHANNEL	MODULATION TECHNOLOGY	MODULATION TYPE	DATA RATE (Mbps)
802.11b	1 to 13	1, 4, 7, 13	DSSS	DBPSK	1
802.11g	1 to 13	1, 4, 7, 13	OFDM	BPSK	6

FREQUENCY RANGE TEST:

☒ Pre-Scan has been conducted to determine the worst-case mode from all possible combinations between available modulations, data rates and antenna ports (if EUT with antenna diversity architecture).

☒ Following channel(s) was (were) selected for the final test as listed below.

MODE	AVAILABLE CHANNEL	TESTED CHANNEL	MODULATION TECHNOLOGY	MODULATION TYPE	DATA RATE (Mbps)
802.11b	1 to 13	1, 7, 13	DSSS	DBPSK	1
802.11g	1 to 13	1, 7, 13	OFDM	BPSK	6

SPURIOUS EMISSIONS TEST (BELOW 1 GHz):

☒ Pre-Scan has been conducted to determine the worst-case mode from all possible combinations between available modulations, xyz axis, data rates and antenna ports (if EUT with antenna diversity architecture).

☒ Following channel(s) was (were) selected for the final test as listed below.

MODE	AVAILABLE CHANNEL	TESTED CHANNEL	MODULATION TECHNOLOGY	MODULATION TYPE	DATA RATE (Mbps)	AXIS
802.11b	1 to 13	1	DSSS	DBPSK	1	z

SPURIOUS EMISSIONS TEST (ABOVE 1 GHz):

☒ Pre-Scan has been conducted to determine the worst-case mode from all possible combinations between available modulations, data rates xyz axis, and antenna ports (if EUT with antenna diversity architecture).

☒ Following channel(s) was (were) selected for the final test as listed below.

MODE	AVAILABLE CHANNEL	TESTED CHANNEL	MODULATION TECHNOLOGY	MODULATION TYPE	DATA RATE (Mbps)	AXIS
802.11b	1 to 13	1, 7, 13	DSSS	DBPSK	1	z
802.11g	1 to 13	1, 7, 13	OFDM	BPSK	6	z

3.3 GENERAL DESCRIPTION OF APPLIED STANDARDS

The EUT is a RF product, according to the specifications of the manufacturers, it must comply with the requirements of the following standards:

EN 300 328 V1.7.1 (2006-10)

All test items have been performed and recorded as per the above standards.

3.4 DESCRIPTION OF SUPPORT UNITS

The EUT has been tested as an independent unit together with other necessary accessories or support units. The following support units or accessories were used to form a representative test configuration during the tests.

NO.	PRODUCT	BRAND	MODEL NO.	SERIAL NO.	FCC ID
1	NOTEBOOK	HP	nx6215	CND5390CMP	FCC DoC Approved
2	CONVERTIBLE BOARD	NA	NA	NA	NA

NO.	SIGNAL CABLE DESCRIPTION OF THE ABOVE SUPPORT UNITS
1	NA
2	NA

NOTE: 1. All power cords of the above support units are non shielded (1.8m).

2. Convertible board is used to control EUT transmit at specific channel.

4 TEST PROCEDURES AND RESULTS

TRANSMITTER PARAMETERS

4.1 EQUIVALENT ISOTROPIC RADIATED POWER

4.1.1 LIMITS OF EQUIVALENT ISOTROPIC RADIATED POWER

CONDITION	FREQUENCY RANGE	LIMIT (e.i.r.p)
Under all test conditions	2400 ~ 2454.0 MHz for outdoor usage in France 2400 ~ 2483.5 MHz for EU countries (include indoor usage in France)	AV: 20dBm / -10dBW

4.1.2 TEST PROCEDURE

Reference to chapter 5.7 of ETSI EN 300 328 V1.7.1 (2006-10).

4.1.3 DEVIATION FROM TEST STANDARD

No deviation.

4.1.4 TEST SETUP

The test setup has been constructed as the normal use condition. Controlling software (provided by manufacturer) has been activated to set the EUT on specific status.

4.1.5 TEST RESULTS

802.11b DSSS MODULATION

FREQUENCY RANGE	2400 ~ 2483.5MHz	**DUTY CYCLE OF EUT**	100%
ENVIRONMENTAL CONDITIONS	15deg.C, 68%RH	**TESTED BY**	Jack Li

TEST CONDITION			**EQUIVALENT ISOTROPIC RADIATED POWER (dBm)**			
			(CH1) 2412 MHz	**(CH4) 2427 MHz**	**(CH7) 2442 MHz**	**(CH13) 2472 MHz**
Tnom(℃)	+20	Vnom (V)	18.43	18.20	18.35	18.37
Tmin(℃)	-20	Vmin (V)	**19.35**	19.00	19.22	19.24
		Vmax (V)	19.32	18.98	19.25	19.23
Tmax(℃)	+55	Vmin (V)	18.75	18.22	18.30	18.60
		Vmax (V)	18.79	18.27	18.17	18.48

Note: 1. For EU countries (include indoor usage in France), channel 1 ~ 13 are allowed. So, only channel 1, 7 and 13 under extreme condition are recorded in the above table.

2. For outdoor usage in France, channel 1 ~ 7 are allowed. So, only channel 1, 4 and 7 under extreme condition are recorded in the above table.

3. The EUT is a plug-in radio device and powered by the host. The test conditions are according to the clause 5.3 of EN 300 328.

802.11g OFDM MODULATION

FREQUENCY RANGE	2400 ~ 2483.5MHz	DUTY CYCLE OF EUT	100%
ENVIRONMENTAL CONDITIONS	15deg.C, 68%RH	TESTED BY	Jack Li

TEST CONDITION			EQUIVALENT ISOTROPIC RADIATED POWER (dBm)			
			(CH1) 2412 MHz	(CH4) 2427 MHz	(CH7) 2442 MHz	(CH13) 2472 MHz
Tnom(℃)	+20	Vnom (V)	14.05	14.07	14.02	14.01
Tmin(℃)	-20	Vmin (V)	**16.34**	16.31	16.02	16.21
		Vmax (V)	16.31	16.29	16.05	16.20
Tmax(℃)	+55	Vmin (V)	14.54	14.53	14.27	14.67
		Vmax (V)	14.58	14.58	14.14	14.55

Note: 1. For EU countries (include indoor usage in France), channel 1 ~ 13 are allowed. So, only channel 1, 7 and 13 under extreme condition are recorded in the above table.

2. For outdoor usage in France, channel 1 ~ 7 are allowed. So, only channel 1, 4 and 7 under extreme condition are recorded in the above table.

3. The EUT is a plug-in radio device and powered by the host. The test conditions are according to the clause 5.3 of EN 300 328.

4.2 PEAK POWER DENSITY

4.2.1 LIMIT OF PEAK POWER DENSITY

CONDITION	FREQUENCY RANGE	LIMIT (e.i.r.p)
Under all test conditions	2400 ~ 2454.0 MHz for outdoor usage in France 2400 ~ 2483.5 MHz for EU countries (include indoor usage in France)	10dBm / 1MHz

4.2.2 TEST PROCEDURE

Reference to chapter 5.7 of ETSI EN 300 328 V1.7.1 (2006-10).

4.2.3 DEVIATION FROM TEST STANDARD

No deviation.

4.2.4 TEST SETUP

The test setup has been constructed as the normal use condition. Controlling software (provided by manufacturer) has been activated to set the EUT on specific status.

4.2.5 TEST RESULTS

802.11b DSSS MODULATION

FREQUENCY RANGE	2400 ~ 2483.5MHz	**DUTY CYCLE OF EUT**	100%
ENVIRONMENTAL CONDITIONS	15deg.C, 68%RH	**TESTED BY**	Jack Li

Channel	Channel Frequency (MHz)	RF Power (dBm/kHz) (E.I.R.P)	Limit (dBm/kHz) (E.I.R.P)	PASS/FAIL
1	2412.45	8.98 / 1000	10 / 1000	PASS
4	2424.48	8.87 / 1000	10 / 1000	PASS
7	2439.47	8.92 / 1000	10 / 1000	PASS
13	2469.35	8.95 / 1000	10 / 1000	PASS

NOTE: The power density shall be limit to -20dBW(10mW) per 1MHz E.I.R.P.

802.11g OFDM MODULATION

FREQUENCY RANGE	2400 ~ 2483.5MHz	**DUTY CYCLE OF EUT**	100%
ENVIRONMENTAL CONDITIONS	15deg.C, 68%RH	**TESTED BY**	Jack Li

Channel	Channel Frequency (MHz)	RF Power (dBm/kHz) (E.I.R.P)	Limit (dBm/kHz) (E.I.R.P)	PASS/FAIL
1	2415.99	2.77 / 1000	10 / 1000	PASS
4	2431.04	3.01 / 1000	10 / 1000	PASS
7	2437.96	2.69 / 1000	10 / 1000	PASS
13	2467.41	2.75 / 1000	10 / 1000	PASS

NOTE: The power density shall be limit to -20dBW(10mW) per 1MHz E.I.R.P.

4.3 FREQUENCY RANGE

4.3.1 LIMITS OF FREQUENCY RANGE

CONDITION	COUNTRY	LIMIT
Under all test conditions	For EU countries (include indoor usage in France)	F_L >2400.0MHz F_H < 2483.5MHz
	For outdoor usage in France	F_L > 2400.0MHz F_H < 2454.0MHz

4.3.2 TEST PROCEDURE

Reference to chapter 5.7 of ETSI EN 300 328 V1.7.1 (2006-10).

4.3.3 DEVIATION FROM TEST STANDARD

No deviation.

4.3.4 TEST SETUP

The EUT and probe antenna were placed into the temperature oven. The probe has to be connected with spectrum analyzer. The power source of the EUT has to be connected with the power supply for voltage change. The frequency has to be recorded for the right and left end above threshold of highest and lowest channel respectively.

4.3.5 TEST RESULTS

802.11b DSSS MODULATION

FREQUENCY RANGE	2400 ~ 2483.5MHz (for EU countries (include indoor usage in France)	**ENVIRONMENTAL CONDITIONS**	15deg.C, 68%RH
TESTED BY	Jack Li		

TEST CONDITIONS			**FREQUENCY (MHz)**	
			LOWEST	**HIGHEST**
Tnom(℃)	+20	Vnom (V)	2402.41	2481.45
Tmin(℃)	-20	Vmin (V)	2401.92	2482.41
		Vmax (V)	2401.92	2482.41
Tmax(℃)	+55	Vmin (V)	2402.17	2481.57
		Vmax (V)	2402.17	2481.57
Measured frequencies (lowest and highest)			F_L = 2401.92	F_H = 2482.41

Note: 1. For EU countries (include indoor usage in France), channel 1 ~ 13 are allowed. So, only channel 1, 7 and 13 under extreme condition are recorded in the above table.

2. The EUT is a plug-in radio device and powered by the host. The test conditions are according to the clause 5.3 of EN 300 328.

FREQUENCY RANGE	2400 ~ 2454MHz (for outdoor usage in France)	**ENVIRONMENTAL CONDITIONS**	15deg.C, 68%RH
TESTED BY	Jack Li		

TEST CONDITIONS			**FREQUENCY (MHz)**	
			LOWEST	**HIGHEST**
Tnom(℃)	+20	Vnom (V)	2402.41	2452.61
Tmin(℃)	-20	Vmin (V)	2401.92	2453.06
		Vmax (V)	2401.92	2453.06
Tmax(℃)	+55	Vmin (V)	2402.17	2452.79
		Vmax (V)	2402.17	2452.79
Measured frequencies (lowest and highest)			F_L = 2401.92	F_H = 2453.06

Note: 1. For outdoor usage in France, channel 1 ~ 7 are allowed. So, only channel 1, 4 and 7 under extreme condition are recorded in the above table.

2. The EUT is a plug-in radio device and powered by the host. The test conditions are according to the clause 5.3 of EN 300 328.

802.11g OFDM MODULATION

FREQUENCY RANGE	2400 ~ 2483.5MHz (for EU countries (include indoor usage in France)	ENVIRONMENTAL CONDITIONS	15deg.C, 68%RH
TESTED BY	Jack Li		

TEST CONDITIONS			FREQUENCY (MHz)	
			LOWEST	HIGHEST
Tnom(℃)	+20	Vnom (V)	2402.81	2481.31
Tmin(℃)	-20	Vmin (V)	2401.48	2482.02
		Vmax (V)	2401.48	2482.02
Tmax(℃)	+55	Vmin (V)	2402.45	2481.53
		Vmax (V)	2402.45	2481.53
Measured frequencies (lowest and highest)			F_L = 2401.48	F_H = 2482.02

Note: 1. For EU countries (include indoor usage in France), channel 1 ~ 13 are allowed. So, only channel 1, 7 and 13 under extreme condition are recorded in the above table.

2. The EUT is a plug-in radio device and powered by the host. The test conditions are according to the clause 5.3 of EN 300 328.

FREQUENCY RANGE	2400 ~ 2454MHz (for outdoor usage in France)	**ENVIRONMENTAL CONDITIONS**	15deg.C, 68%RH
TESTED BY	Jack Li		

TEST CONDITIONS			**FREQUENCY (MHz)**	
			LOWEST	**HIGHEST**
Tnom(℃)	+20	Vnom (V)	2402.81	2451.75
Tmin(℃)	-20	Vmin (V)	2401.48	2452.64
		Vmax (V)	2401.48	2452.64
Tmax(℃)	+55	Vmin (V)	2402.45	2451.84
		Vmax (V)	2402.45	2451.84
Measured frequencies (lowest and highest)			FL = 2401.48	FH = 2452.64

Note: 1. For outdoor usage in France, channel 1 ~ 7 are allowed. So, only channel 1, 4 and 7 under extreme condition are recorded in the above table.

2. The EUT is a plug-in radio device and powered by the host. The test conditions are according to the clause 5.3 of EN 300 328.

4.4 TRANSMITTER SPURIOUS EMISSIONS

4.4.1 LIMITS OF TRANSMITTER SPURIOUS EMISSIONS

Transmitter limits for narrowband spurious emissions

Frequency Range	Operating Limit	Standby Limit
30MHz ~ 1GHz	-36dBm	-57dBm
Above 1GHz ~ 12.75GHz	-30dBm	-47dBm
1.8~1.9GHz 5.15~5.3GHz	-47dBm	-47dBm

4.4.2 TEST PROCEDURE

Reference to chapter 5.7 of ETSI EN 300 328 V1.7.1 (2006-10).

4.4.3 DEVIATION FROM TEST STANDARD

No deviation.

4.4.4 TEST SETUP

1. For the actual test configuration, please refer to the related item in this test report (Photographs of the Test Configuration).

2. The test setup has been constructed as the normal use condition. Controlling software (provided by manufacturer) has been activated to set the EUT on specific status.

4.4.5 TEST RESULTS

BELOW 1GHz WORST-CASE DATA: 802.11b DSSS MODULATION

OPERATING FREQUENCY RANGE	2400 ~ 2483.5MHz	**SPURIOUS EMISSION FREQUENCY RANGE**	30MHz ~ 1GHz
ENVIRONMENTAL CONDITIONS	21deg.C, 68%RH	**OPERATING CHANNEL**	1
DUTY CYCLE OF EUT	100%	**TESTED BY**	Alex Chang

SPURIOUS EMISSION LEVEL				
Frequency (MHz)	**Antenna Polarization**	**Level (dBm)**	**Limit (dBm)**	**Margin**
81.30	V	-66.02	-36.00	-30.02
100.20	V	-62.35	-36.00	-26.35
135.75	H	-59.00	-36.00	-23.00
135.75	V	-60.56	-36.00	-24.56
162.75	H	-58.25	-36.00	-22.25
162.75	V	-59.17	-36.00	-23.17
167.25	H	-58.32	-36.00	-22.32
167.25	V	-62.29	-36.00	-26.29
175.80	H	-60.28	-36.00	-24.28
175.80	V	-66.39	-36.00	-30.39
192.00	H	-59.69	-36.00	-23.69
192.00	V	-65.33	-36.00	-29.33
200.55	H	-61.66	-36.00	-25.66
287.85	H	-63.41	-36.00	-27.41
301.17	H	-65.01	-36.00	-29.01
352.50	H	-59.17	-36.00	-23.17
384.00	H	-65.66	-36.00	-29.66
401.50	H	-65.96	-36.00	-29.96
431.83	H	-59.58	-36.00	-23.58
431.83	V	-65.10	-36.00	-29.10
442.33	V	-66.89	-36.00	-30.89
443.50	H	-63.85	-36.00	-27.85
479.67	H	-58.26	-36.00	-22.26
479.67	V	-58.38	-36.00	-22.38

NOTE: The emission behavior belongs to narrowband spurious emission.

OPERATING FREQUENCY RANGE	2400 ~ 2483.5MHz	**SPURIOUS EMISSION FREQUENCY RANGE**	30MHz ~ 1GHz
ENVIRONMENTAL CONDITIONS	21deg.C, 68%RH	**OPERATING CHANNEL**	1
DUTY CYCLE OF EUT	100%	**TESTED BY**	Alex Chang

SPURIOUS EMISSION LEVEL				
Frequency (MHz)	**Antenna Polarization**	**Level (dBm)**	**Limit (dBm)**	**Margin**
487.83	V	-63.66	-36.00	-27.66
492.50	H	-59.97	-36.00	-23.97
543.83	V	-66.48	-36.00	-30.48
751.50	V	-63.71	-36.00	-27.71
801.67	V	-63.42	-36.00	-27.42
802.83	H	-65.00	-36.00	-29.00
815.67	V	-64.57	-36.00	-28.57
902.00	H	-64.41	-36.00	-28.41
902.00	V	-65.65	-36.00	-29.65
912.50	V	-66.13	-36.00	-30.13
998.83	V	-66.82	-36.00	-30.82

NOTE: The emission behavior belongs to narrowband spurious emission.

ABOVE 1GHz DATA: 802.11b DSSS MODULATION

OPERATING FREQUENCY RANGE	2400 ~ 2483.5MHz	**SPURIOUS EMISSION FREQUENCY RANGE**	1GHz ~ 12.75GHz
ENVIRONMENTAL CONDITIONS	21deg.C, 68%RH	**OPERATING CHANNEL**	1, 7 & 13
DUTY CYCLE OF EUT	100%	**TESTED BY**	Alex Chang

SPURIOUS EMISSION LEVEL					
Channel	**Frequency (MHz)**	**Antenna Polarization**	**Level (dBm)**	**Limit (dBm)**	**Margin (dB)**
1	3215.96	V	-55.65	-30.00	-25.65
	3215.99	H	-55.05	-30.00	-25.05
	4823.95	H	-43.75	-30.00	-13.75
	4823.95	V	-40.85	-30.00	-10.85
	6431.93	V	-60.43	-30.00	-30.43
	6431.94	H	-61.50	-30.00	-31.50
	9647.89	H	-48.65	-30.00	-18.65
	9647.91	V	-49.72	-30.00	-19.72
7	3255.97	H	-55.38	-30.00	-25.38
	3255.98	V	-57.06	-30.00	-27.06
	4883.95	H	-44.47	-30.00	-14.47
	4883.95	V	-40.21	-30.00	-10.21
	6511.94	H	-60.31	-30.00	-30.31
	6511.95	V	-60.61	-30.00	-30.61
	9767.91	H	-50.09	-30.00	-20.09
	9767.91	V	-48.95	-30.00	-18.95
13	3295.96	H	-56.25	-30.00	-26.25
	3295.97	V	-58.42	-30.00	-28.42
	4943.95	V	-41.73	-30.00	-11.73
	4943.96	H	-44.20	-30.00	-14.20
	6591.93	H	-60.75	-30.00	-30.75
	6591.93	V	-59.98	-30.00	-29.98
	9887.90	H	-49.48	-30.00	-19.48
	9887.91	V	-48.36	-30.00	-18.36

NOTE: The emission behavior belongs to narrowband spurious emission.

802.11g OFDM MODULATION

OPERATING FREQUENCY RANGE	2400 ~ 2483.5MHz	**SPURIOUS EMISSION FREQUENCY RANGE**	1GHz ~ 12.75GHz
ENVIRONMENTAL CONDITIONS	21deg.C, 68%RH	**OPERATING CHANNEL**	1, 7 & 13
DUTY CYCLE OF EUT	100%	**TESTED BY**	Alex Chang

SPURIOUS EMISSION LEVEL					
Channel	**Frequency (MHz)**	**Antenna Polarization**	**Level (dBm)**	**Limit (dBm)**	**Margin (dB)**
1	3215.96	H	-55.49	-30.00	-25.49
	3215.96	V	-56.55	-30.00	-26.55
	4824.00	H	-60.80	-30.00	-30.80
	4824.00	V	-59.25	-30.00	-29.25
	6431.93	V	-60.32	-30.00	-30.32
	6431.94	H	-60.63	-30.00	-30.63
	9647.92	V	-54.48	-30.00	-24.48
	9648.00	H	-55.47	-30.00	-25.47
7	3255.96	H	-56.46	-30.00	-26.46
	3255.97	V	-58.37	-30.00	-28.37
	4883.92	V	-61.36	-30.00	-31.36
	4884.00	H	-62.77	-30.00	-32.77
	6511.93	H	-60.05	-30.00	-30.05
	6511.94	V	-60.91	-30.00	-30.91
	9767.92	H	-56.78	-30.00	-26.78
	9767.92	V	-55.68	-30.00	-25.68
13	3295.94	V	-60.51	-30.00	-30.51
	3295.96	H	-57.44	-30.00	-27.44
	4943.67	V	-62.16	-30.00	-32.16
	4943.92	H	-61.83	-30.00	-31.83
	6591.94	H	-60.72	-30.00	-30.72
	6591.94	V	-61.11	-30.00	-31.11
	9887.92	H	-58.28	-30.00	-28.28
	9887.92	V	-55.59	-30.00	-25.59

NOTE: The emission behavior belongs to narrowband spurious emission.

RECEIVER PARAMETERS

4.5 RECEIVER SPURIOUS EMISSIONS

4.5.1 LIMITS OF RECEIVER SPURIOUS EMISSIONS

Narrowband spurious emission limits for receivers

Frequency Range	Limit
30MHz ~ 1GHz	-57dBm
Above 1GHz ~ 12.75GHz	-47dBm

4.5.2 TEST PROCEDURE

Reference to chapter 5.7 of ETSI EN 300 328 V1.7.1 (2006-10).

4.5.3 DEVIATION FROM TEST STANDARD

No deviation.

4.5.4 TEST SETUP

1. For the actual test configuration, please refer to the related item in this test report (Photographs of the Test Configuration).

2. The test setup has been constructed as the normal use condition. Controlling software (provided by manufacturer) has been activated to set the EUT on specific status.

4.5.5 TEST RESULTS

802.11b DSSS MODULATION

OPERATING FREQUENCY RANGE	2400 ~ 2483.5MHz	**SPURIOUS EMISSION FREQUENCY RANGE**	30MHz ~ 1GHz
ENVIRONMENTAL CONDITIONS	21deg.C, 68%RH	**OPERATING CHANNEL**	1
TESTED BY	Alex Chang		

SPURIOUS EMISSION LEVEL				
Frequency (MHz)	**Antenna Polarization**	**Level (dBm)**	**Limit (dBm)**	**Margin**
75.00	V	-69.43	-57.00	-12.43
81.75	V	-65.83	-57.00	-8.83
90.75	V	-66.48	-57.00	-9.48
100.20	V	-68.01	-57.00	-11.01
108.30	V	-69.87	-57.00	-12.87
115.95	V	-66.60	-57.00	-9.60
126.30	H	-65.07	-57.00	-8.07
128.10	V	-69.79	-57.00	-12.79
135.75	H	-59.43	-57.00	-2.43
136.20	V	-60.31	-57.00	-3.31
145.65	H	-66.85	-57.00	-9.85
145.65	V	-67.36	-57.00	-10.36
151.50	H	-66.84	-57.00	-9.84
153.75	V	-67.56	-57.00	-10.56
162.75	H	-59.03	-57.00	-2.03
164.10	V	-58.62	-57.00	-1.62
167.25	H	-58.50	-57.00	-1.50
167.25	V	-60.96	-57.00	-3.96
175.80	H	-60.86	-57.00	-3.86
175.80	V	-68.31	-57.00	-11.31
192.00	H	-59.20	-57.00	-2.20
192.00	V	-65.15	-57.00	-8.15
200.55	H	-62.46	-57.00	-5.46
200.55	V	-69.56	-57.00	-12.56

NOTE: The emission behavior belongs to narrowband spurious emission.

OPERATING FREQUENCY RANGE	2400 ~ 2483.5MHz	**SPURIOUS EMISSION FREQUENCY RANGE**	30MHz ~ 1GHz
ENVIRONMENTAL CONDITIONS	21deg.C, 68%RH	**OPERATING CHANNEL**	1
TESTED BY	Alex Chang		

SPURIOUS EMISSION LEVEL				
Frequency (MHz)	**Antenna Polarization**	**Level (dBm)**	**Limit (dBm)**	**Margin**
210.00	H	-66.49	-57.00	-9.49
222.15	H	-64.72	-57.00	-7.72
231.15	H	-65.99	-57.00	-8.99
287.85	H	-63.52	-57.00	-6.52
287.85	V	-67.80	-57.00	-10.80
301.17	H	-64.37	-57.00	-7.37
351.48	H	-59.35	-57.00	-2.35
384.24	H	-66.09	-57.00	-9.09
432.21	H	-64.16	-57.00	-7.16
434.55	V	-64.85	-57.00	-7.85
441.57	H	-64.17	-57.00	-7.17
480.18	H	-58.82	-57.00	-1.82
480.18	V	-59.28	-57.00	-2.28
491.88	H	-63.50	-57.00	-6.50
491.88	V	-63.88	-57.00	-6.88
528.15	H	-66.28	-57.00	-9.28
751.62	V	-66.16	-57.00	-9.16
801.93	H	-66.91	-57.00	-9.91
801.93	V	-62.99	-57.00	-5.99
815.97	H	-66.66	-57.00	-9.66
818.31	V	-64.49	-57.00	-7.49
902.55	H	-65.71	-57.00	-8.71
902.55	V	-63.51	-57.00	-6.51
911.91	V	-66.24	-57.00	-9.24
930.63	H	-66.46	-57.00	-9.46
959.88	V	-66.02	-57.00	-9.02
998.49	V	-66.27	-57.00	-9.27

NOTE: The emission behavior belongs to narrowband spurious emission.

OPERATING FREQUENCY RANGE	2400 ~ 2483.5MHz	**SPURIOUS EMISSION FREQUENCY RANGE**	1GHz ~ 12.75GHz
ENVIRONMENTAL CONDITIONS	21deg.C, 68%RH	**OPERATING CHANNEL**	1, 7 & 13
TESTED BY	Alex Chang		

SPURIOUS EMISSION LEVEL					
Channel	**Frequency (MHz)**	**Antenna Polarization**	**Level (dBm)**	**Limit (dBm)**	**Margin (dB)**
1	3215.98	H	-53.81	-47.00	-6.81
	3215.99	V	-54.71	-47.00	-7.71
	6431.95	V	-60.22	-47.00	-13.22
	6431.96	H	-59.66	-47.00	-12.66
7	3255.96	H	-54.97	-47.00	-7.97
	3255.98	V	-55.72	-47.00	-8.72
	6511.95	V	-58.90	-47.00	-11.90
	6511.96	H	-59.12	-47.00	-12.12
13	3295.96	H	-56.39	-47.00	-9.39
	3295.97	V	-58.52	-47.00	-11.52
	6591.96	H	-60.53	-47.00	-13.53
	6591.96	V	-60.25	-47.00	-13.25

NOTE: The emission behavior belongs to narrowband spurious emission.

5 PHOTOGRAPHS OF THE TEST CONFIGURATION

Tx and Rx Spurious Emission

6 INFORMATION ON THE TESTING LABORATORIES

We, ADT Corp., were founded in 1988 to provide our best service in EMC, Radio, Telecom and Safety consultation. Our laboratories are accredited and approved by the following approval agencies according to ISO/IEC 17025.

USA	FCC, UL, A2LA
Germany	TUV Rheinland
Japan	VCCI
Norway	NEMKO
Canada	INDUSTRY CANADA, CSA
R.O.C.	TAF, BSMI, NCC
Netherlands	Telefication
Singapore	GOST-ASIA (MOU)
Russia	CERTIS (MOU)

Copies of accreditation certificates of our laboratories obtained from approval agencies can be downloaded from our web site: www.adt.com.tw/index.5/phtml. If you have any comments, please feel free to contact us at the following:

Linko EMC/RF Lab
Tel: 886-2-26052180
Fax: 886-2-26051924

Hsin Chu EMC/RF Lab
Tel: 886-3-5935343
Fax: 886-3-5935342

Hwa Ya EMC/RF/Safety/Telecom Lab
Tel: 886-3-3183232
Fax: 886-3-3185050

Web Site: www.adt.com.tw

The address and road map of all our labs can be found in our web site also.